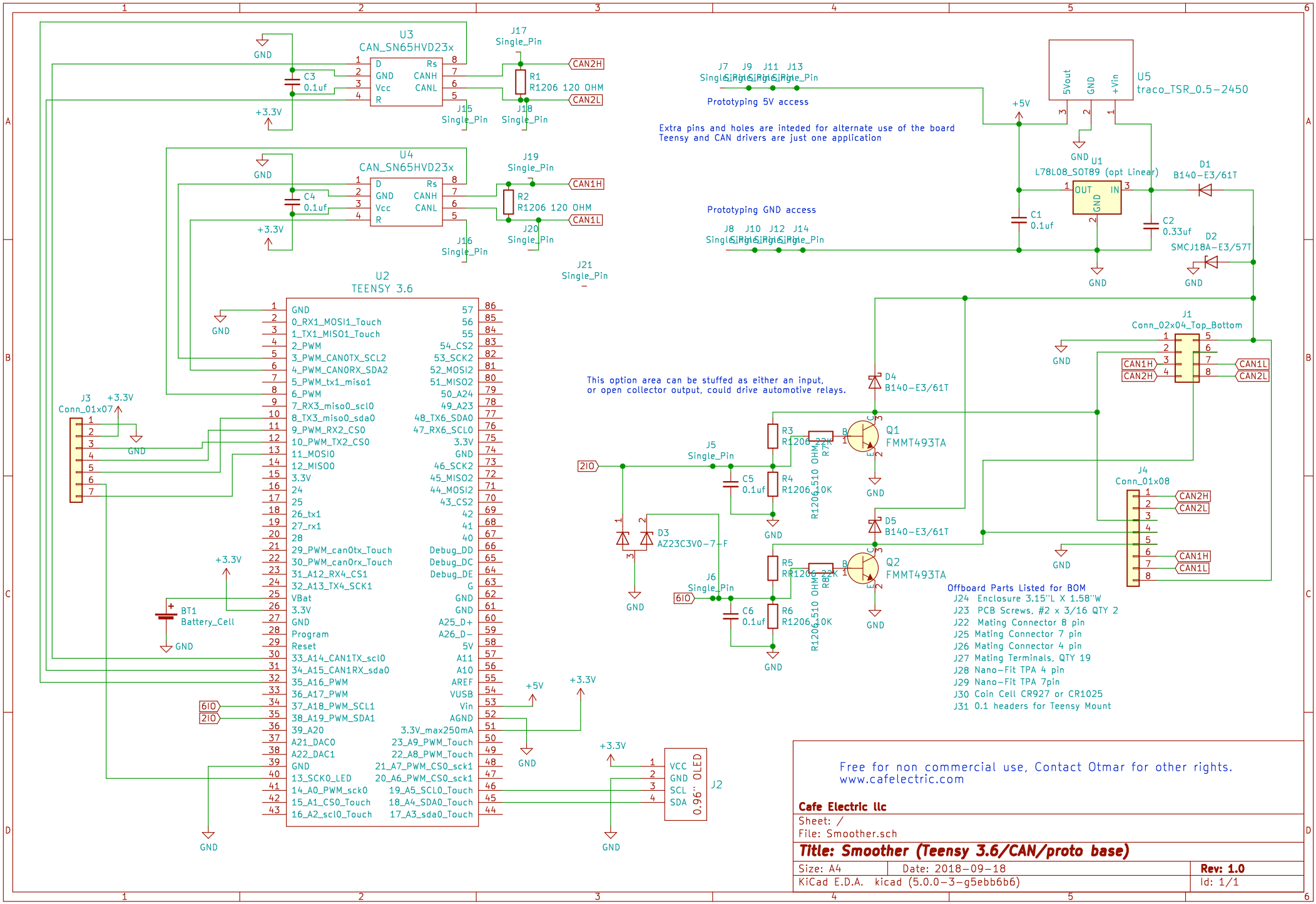
U3
CAN_SN65HVD23x
U4
CAN_SN65HVD23x
U2
TEENSY 3.6
U5
traco_TSR_0.5-2450
U1
L78L08_SOT89 (opt Linear)
J1
Conn_02x04_Top_Bottom
J4
Conn_01x08
J3
Conn_01x07
J2
0.96" OLED
Q1
FMMT493TA
Q2
FMMT493TA
D1
B140-E3/61T
D2
SMCJ18A-E3/57T
D3
AZ23C3V0-7-F
D4
B140-E3/61T
D5
B140-E3/61T
R1
R1206 120 OHM
R2
R1206 120 OHM
R3
R1206 22K
R4
R1206 10K
R5
R1206 22K
R6
R1206 10K
R7
R1206 510 OHM
R8
R1206 510 OHM
C1
0.1uf
C2
0.33uf
C3
0.1uf
C4
0.1uf
C5
0.1uf
C6
0.1uf
BT1
Battery_Cell
J5
Single_Pin
J6
Single_Pin
J7 J9 J11 J13
Single_Pin
Prototyping 5V access
Extra pins and holes are inteded for alternate use of the board
Teensy and CAN drivers are just one application
Prototyping GND access
J8 J10 J12 J14
Single_Pin
This option area can be stuffed as either an input,
or open collector output, could drive automotive relays.
Offboard Parts Listed for BOM
J24 Enclosure 3.15"L X 1.58"W
J23 PCB Screws, #2 x 3/16 QTY 2
J22 Mating Connector 8 pin
J25 Mating Connector 7 pin
J26 Mating Connector 4 pin
J27 Mating Terminals, QTY 19
J28 Nano-Fit TPA 4 pin
J29 Nano-Fit TPA 7pin
J30 Coin Cell CR927 or CR1025
J31 0.1 headers for Teensy Mount
Free for non commercial use, Contact Otmar for other rights.
www.cafelectric.com
Cafe Electric llc
Sheet: /
File: Smoother.sch
Title: Smoother (Teensy 3.6/CAN/proto base)
Size: A4
Date: 2018-09-18
Rev: 1.0
KiCad E.D.A. kicad (5.0.0-3-g5ebb6b6)
Id: 1/1